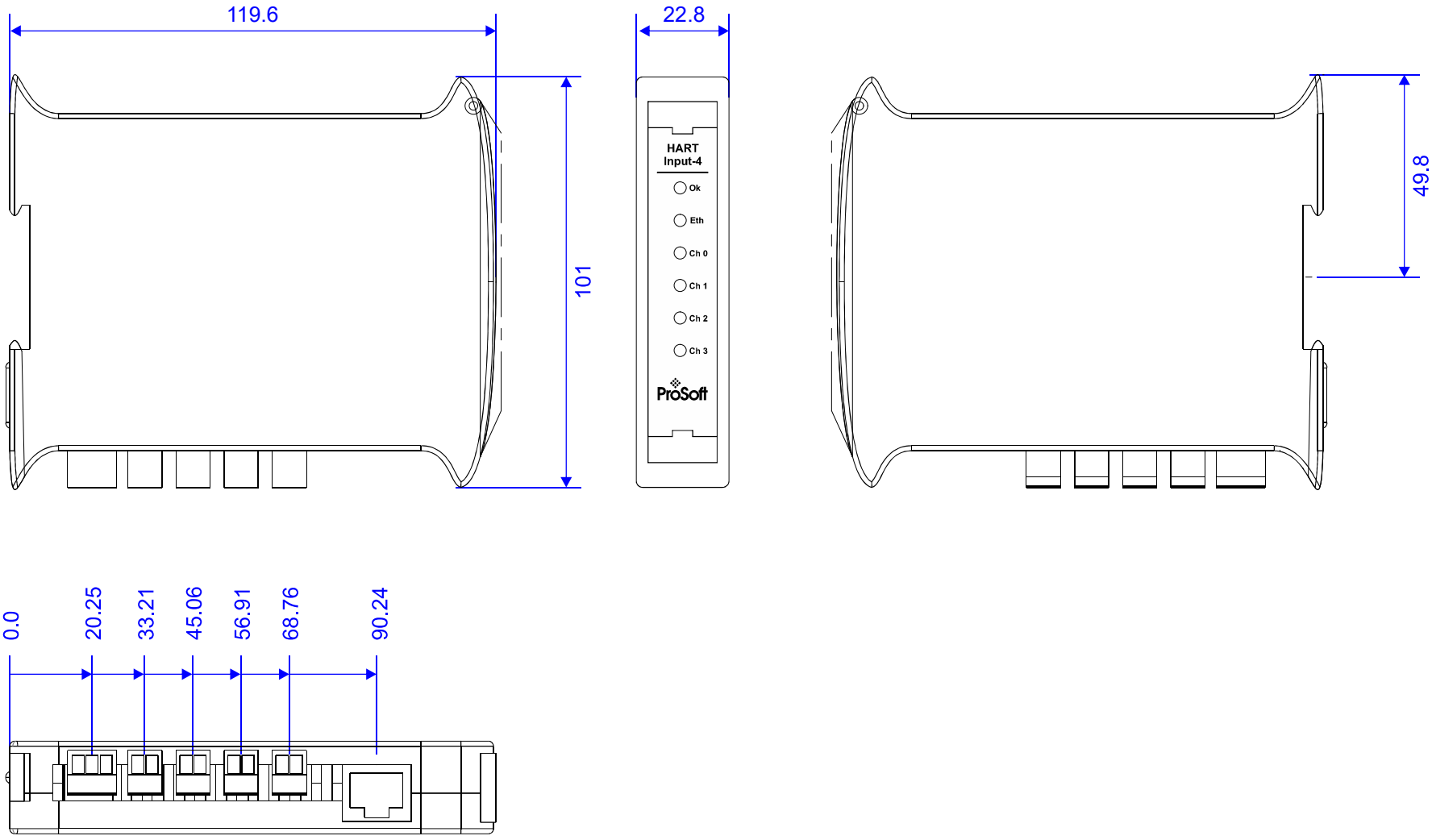

Notes :
All dimensions in mm
Scale: 1:1

Title	PLX51-HART-4I Enclosure		ProSoft TECHNOLOGY
Doc No.	D135-009		
Date	12 November 2026	Sheet 1 of 1	Rev 1.1